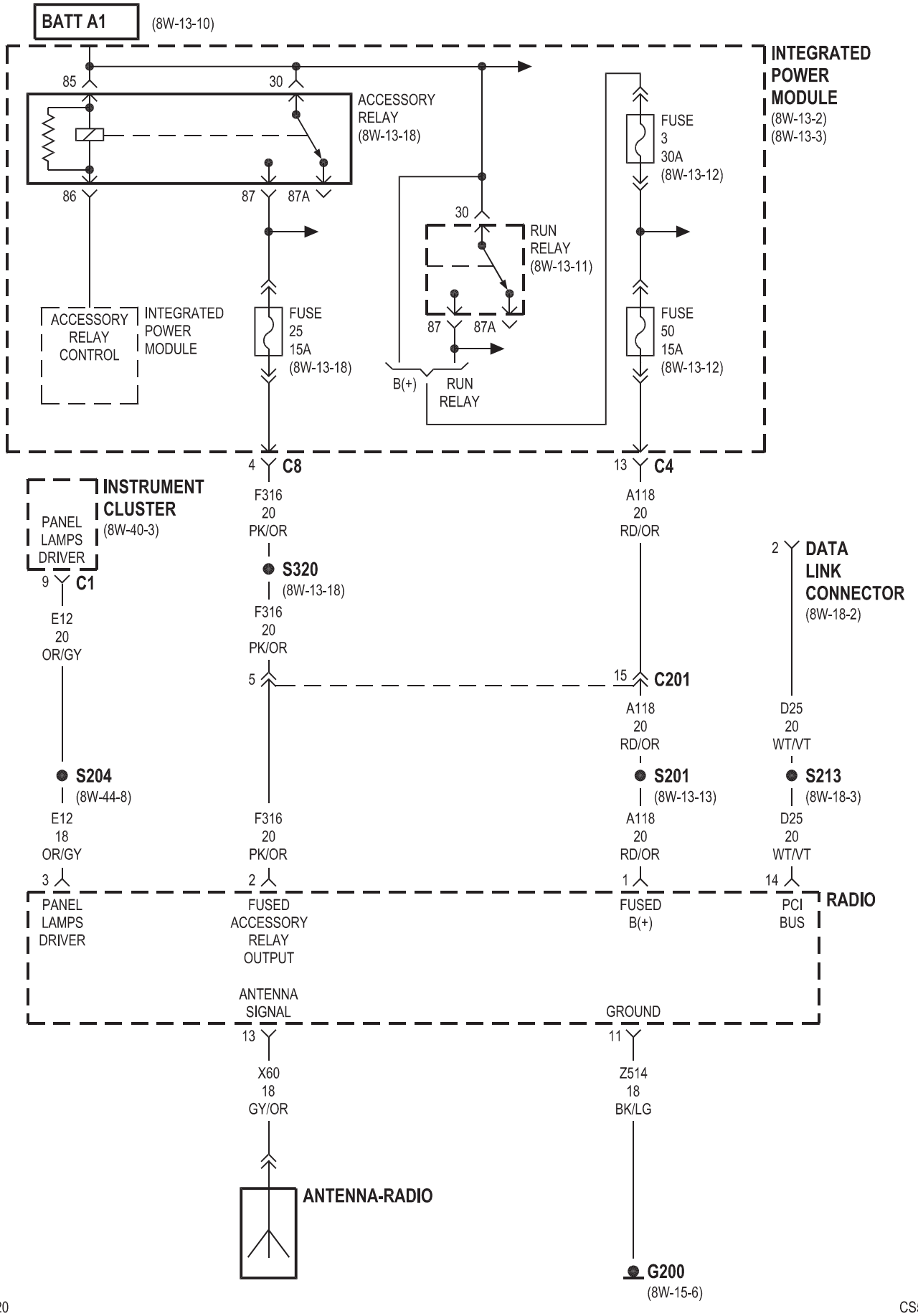
BATT A1
(8W-13-10)
INTEGRATED POWER MODULE
(8W-13-2)
(8W-13-3)
85
30
ACCESSORY RELAY
(8W-13-18)
86
87
87A
FUSE 3 30A
(8W-13-12)
30
RUN RELAY
(8W-13-11)
87
87A
ACCESSORY RELAY CONTROL
INTEGRATED POWER MODULE
FUSE 25 15A
(8W-13-18)
B(+)
RUN RELAY
FUSE 50 15A
(8W-13-12)
4
C8
13
C4
INSTRUMENT CLUSTER
(8W-40-3)
PANEL LAMPS DRIVER
9
C1
F316 20 PK/OR
S320
(8W-13-18)
F316 20 PK/OR
A118 20 RD/OR
2
DATA LINK CONNECTOR
(8W-18-2)
E12 20 OR/GY
5
15
C201
A118 20 RD/OR
D25 20 WT/VT
S204
(8W-44-8)
S201
(8W-13-13)
S213
(8W-18-3)
E12 18 OR/GY
F316 20 PK/OR
A118 20 RD/OR
D25 20 WT/VT
3
2
1
14
RADIO
PANEL LAMPS DRIVER
FUSED ACCESSORY RELAY OUTPUT
FUSED B(+)
PCI BUS
ANTENNA SIGNAL
GROUND
13
11
X60 18 GY/OR
Z514 18 BK/LG
ANTENNA-RADIO
G200
(8W-15-6)

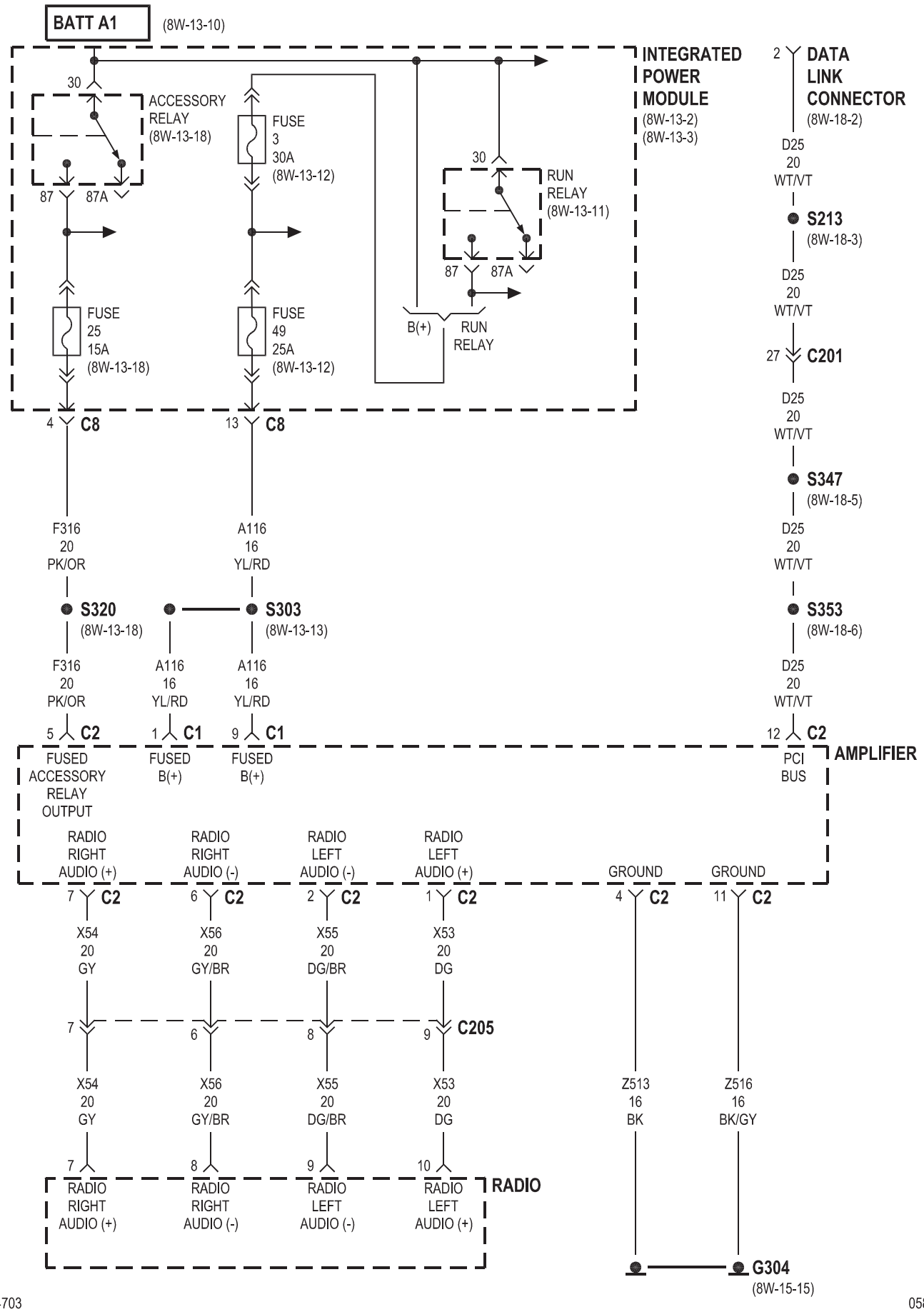
BATT A1
(8W-13-10)
INTEGRATED POWER MODULE
(8W-13-2)
(8W-13-3)
30
ACCESSORY RELAY
(8W-13-18)
87
87A
FUSE 3 30A
(8W-13-12)
30
RUN RELAY
(8W-13-11)
87
87A
FUSE 25 15A
(8W-13-18)
FUSE 49 25A
(8W-13-12)
B(+)
RUN RELAY
4 C8
13 C8
F316 20 PK/OR
A116 16 YL/RD
S320
(8W-13-18)
S303
(8W-13-13)
F316 20 PK/OR
A116 16 YL/RD
A116 16 YL/RD
5 C2
1 C1
9 C1
FUSED ACCESSORY RELAY OUTPUT
FUSED B(+)
FUSED B(+)
2 DATA LINK CONNECTOR
(8W-18-2)
D25 20 WT/VT
S213
(8W-18-3)
D25 20 WT/VT
27 C201
D25 20 WT/VT
S347
(8W-18-5)
D25 20 WT/VT
S353
(8W-18-6)
D25 20 WT/VT
12 C2
PCI BUS
AMPLIFIER
RADIO RIGHT AUDIO (+)
RADIO RIGHT AUDIO (-)
RADIO LEFT AUDIO (-)
RADIO LEFT AUDIO (+)
GROUND
GROUND
7 C2
6 C2
2 C2
1 C2
4 C2
11 C2
X54 20 GY
X56 20 GY/BR
X55 20 DG/BR
X53 20 DG
7
6
8
9 C205
X54 20 GY
X56 20 GY/BR
X55 20 DG/BR
X53 20 DG
Z513 16 BK
Z516 16 BK/GY
7
8
9
10
RADIO RIGHT AUDIO (+)
RADIO RIGHT AUDIO (-)
RADIO LEFT AUDIO (-)
RADIO LEFT AUDIO (+)
RADIO
G304
(8W-15-15)

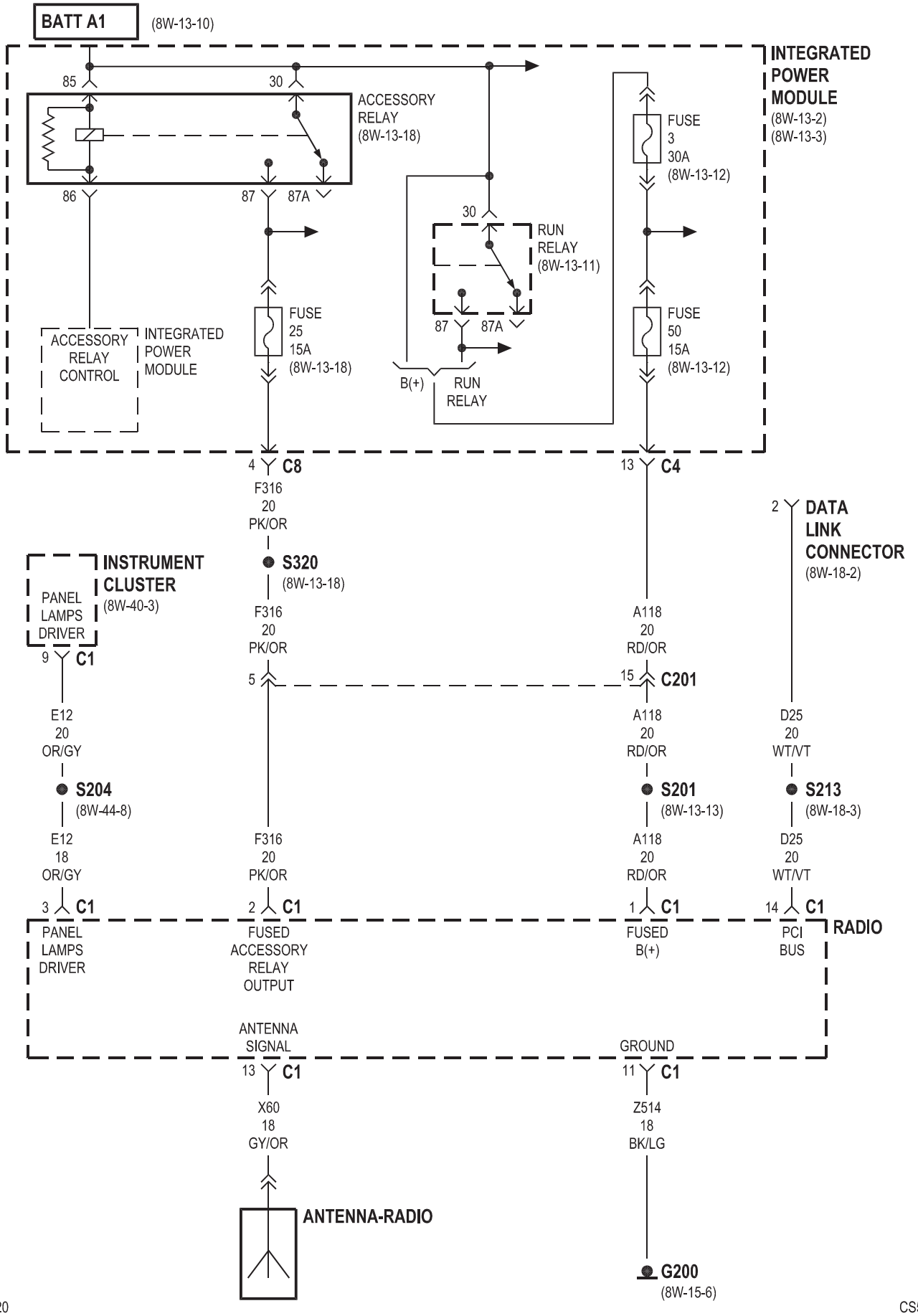
BATT A1
(8W-13-10)
INTEGRATED POWER MODULE
(8W-13-2)
(8W-13-3)
85
30
ACCESSORY RELAY
(8W-13-18)
86
87
87A
FUSE 3 30A
(8W-13-12)
30
RUN RELAY
(8W-13-11)
87
87A
ACCESSORY RELAY CONTROL
INTEGRATED POWER MODULE
FUSE 25 15A
(8W-13-18)
B(+)
RUN RELAY
FUSE 50 15A
(8W-13-12)
4 C8
13 C4
F316 20 PK/OR
S320
(8W-13-18)
F316 20 PK/OR
A118 20 RD/OR
2 DATA LINK CONNECTOR
(8W-18-2)
INSTRUMENT CLUSTER
(8W-40-3)
PANEL LAMPS DRIVER
9 C1
5
15 C201
E12 20 OR/GY
A118 20 RD/OR
D25 20 WT/VT
S204
(8W-44-8)
S201
(8W-13-13)
S213
(8W-18-3)
E12 18 OR/GY
F316 20 PK/OR
A118 20 RD/OR
D25 20 WT/VT
3 C1
2 C1
1 C1
14 C1
RADIO
PANEL LAMPS DRIVER
FUSED ACCESSORY RELAY OUTPUT
FUSED B(+)
PCI BUS
ANTENNA SIGNAL
GROUND
13 C1
11 C1
X60 18 GY/OR
Z514 18 BK/LG
ANTENNA-RADIO
G200
(8W-15-6)

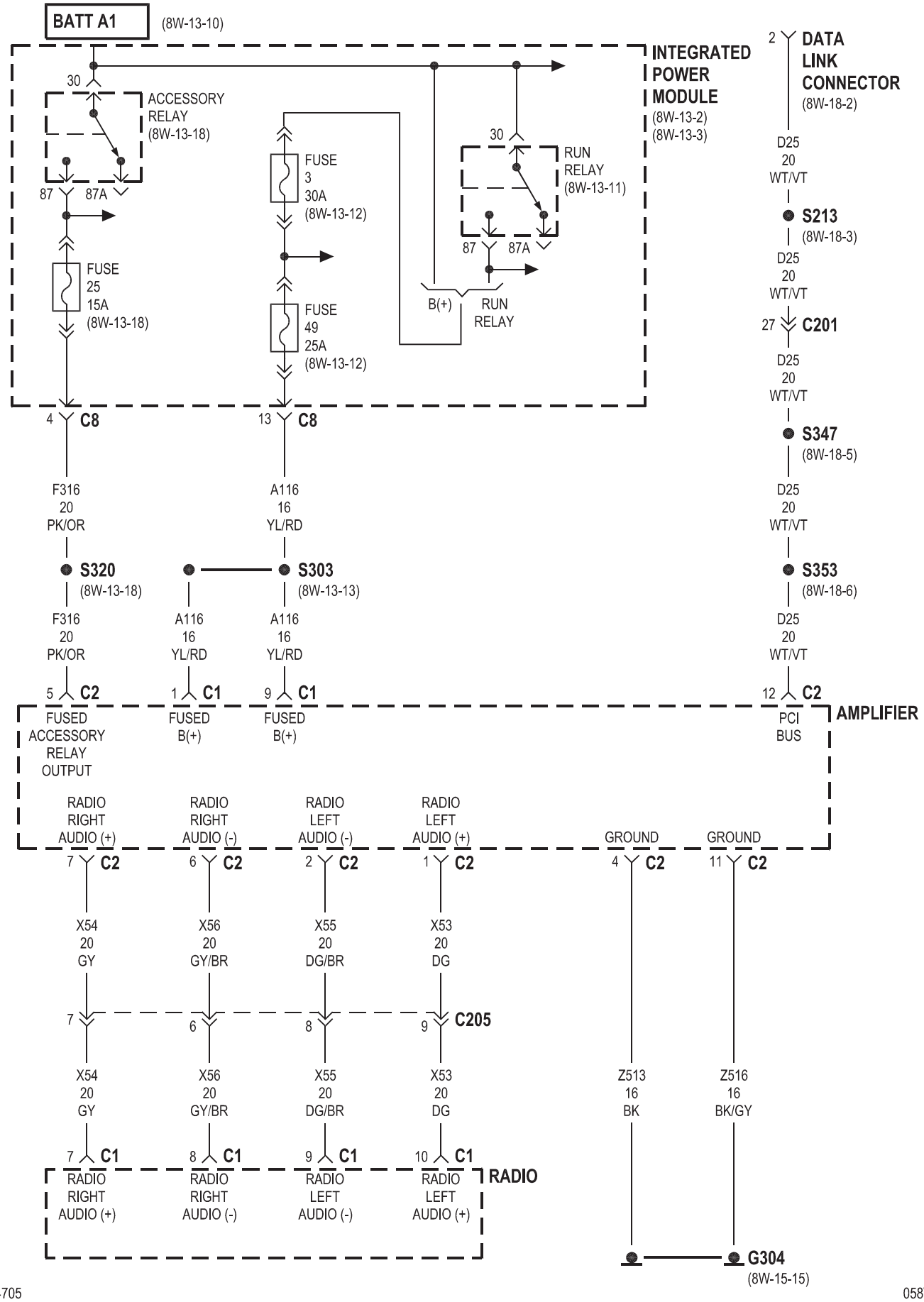
BATT A1
(8W-13-10)
INTEGRATED POWER MODULE
(8W-13-2)
(8W-13-3)
ACCESSORY RELAY
(8W-13-18)
30
87
87A
FUSE 25 15A
(8W-13-18)
FUSE 3 30A
(8W-13-12)
FUSE 49 25A
(8W-13-12)
RUN RELAY
(8W-13-11)
B(+)
RUN RELAY
DATA LINK CONNECTOR
(8W-18-2)
2
D25 20 WT/VT
S213
(8W-18-3)
27
C201
S347
(8W-18-5)
S353
(8W-18-6)
4 C8
13 C8
F316 20 PK/OR
A116 16 YL/RD
S320
(8W-13-18)
S303
(8W-13-13)
5 C2
1 C1
9 C1
12 C2
FUSED ACCESSORY RELAY OUTPUT
FUSED B(+)
PCI BUS
AMPLIFIER
RADIO RIGHT AUDIO (+)
RADIO RIGHT AUDIO (-)
RADIO LEFT AUDIO (-)
RADIO LEFT AUDIO (+)
GROUND
7 C2
6 C2
2 C2
1 C2
4 C2
11 C2
X54 20 GY
X56 20 GY/BR
X55 20 DG/BR
X53 20 DG
C205
Z513 16 BK
Z516 16 BK/GY
7 C1
8 C1
9 C1
10 C1
RADIO
G304
(8W-15-15)